SPX POWER TEAM® OTC®

SPX Corporation
5885 11th Street
Rockford, IL 61109-3699 USA

Internet Address:
http://www.powerteam.com
Tech. Services: (800) 477-8326
Fax: (800) 765-8326
Order Entry: (800) 541-1418
Fax: (800) 288-7031

SPX Corporation
655 Eisenhower Drive
Owatonna, MN 55060-0995 USA
Phone: (507) 455-7000
Tech. Services: (800) 533-6127
Fax: (800) 955-8329
Order Entry: (507) 455-1480
Fax: (800) 283-8665
International Sales: (507) 455-7223
Fax: (507) 455-7746

Form No. 100706

Parts List for:

4016	61871	P157-BRICK-EPR
61821	61872	P157-LUAM
61822	JT05845	P159
61823-GRC	P157	P159 Series
61869	P157 Series	P159-GRC

TWO-STAGE
HYDRAULIC HAND PUMP

See pg. 2 of 2 for section views A-A, B-B, & C-C.

TWO-WAY VALVE

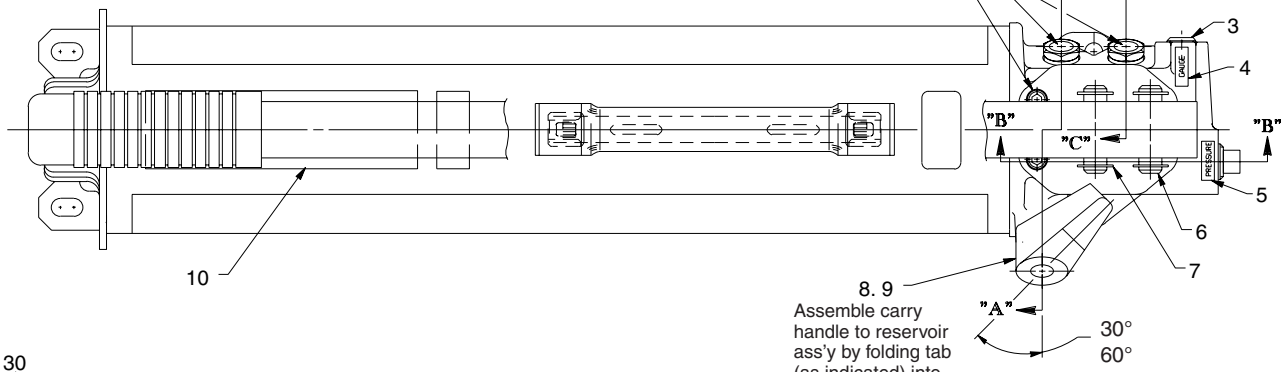

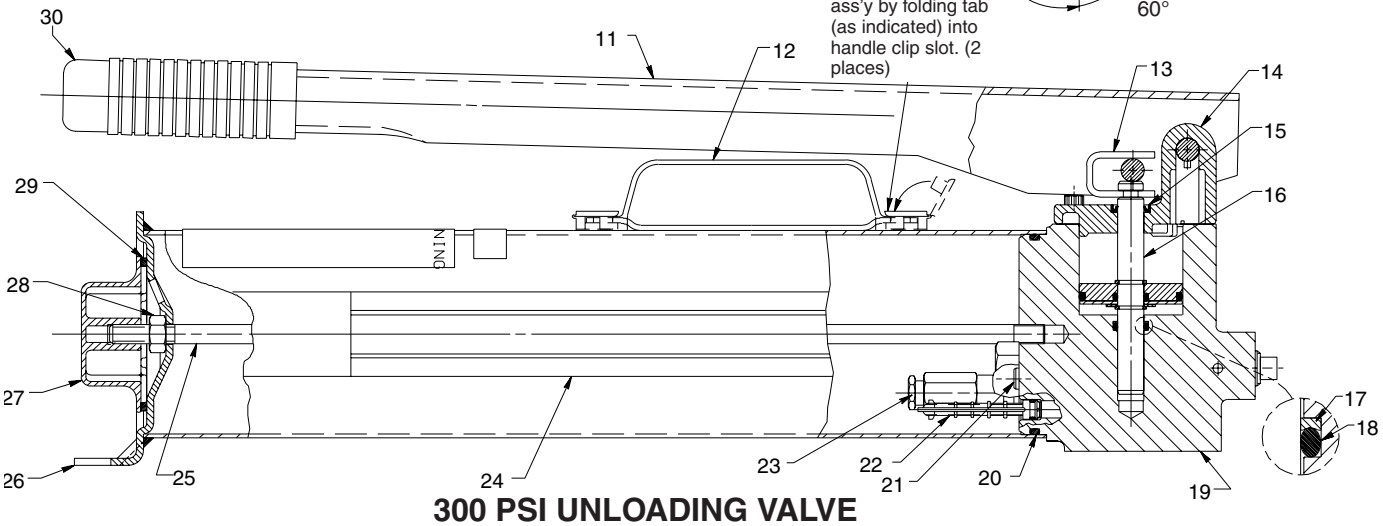

300 PSI UNLOADING VALVE

⚠ WARNING

To help prevent personal injury, all repairs MUST be performed by a qualified person trained in the repair of hydraulic equipment.

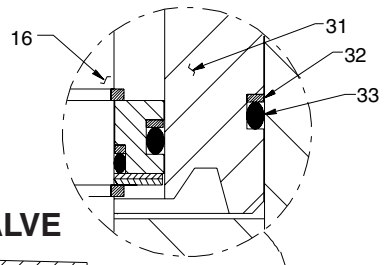

1000 & 1400 PSI UNLOADING VALVE

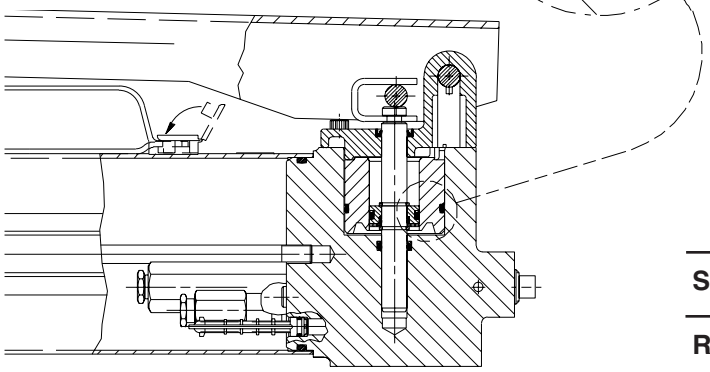

© SPX Corporation

Parts List, Form No. 100706, Back sheet 1 of 2

Item No.	Part No.	No. Req'd	Description
1	**10008**	4	Cap Screw (1/4-20 UNC x 3/4 Lg.)
2	**•†*215907**	2	Decal (DO NOT REMOVE)
3	**14972**	1	Plug (1/4 NPTF)
4	**215300**	1	Decal (GAUGE)
5	**215301**	1	Decal (PRESSURE)
6	**211742**	2	Dowel Pin
7	**211743**	4	Retaining Ring (For 7/16" shaft)
8	**21643**	1	Knob
9	**10556**	2	Set Screw (Torque to 50/70 in. lbs.)
10	***305977**	1	Warning Decal
11	**61806OR9**	1	Handle (For 61823-GRC, P157, P157-BRICK-EPR, P159, & P159-GRC)
	61806BL2	1	Handle (For 4016 & 61869)
	61806BR13	1	Handle (For JT05845)
	61806WH2	1	Handle (For 61821)
	61806YE3	1	Handle (For 61822 & P157-LUAM)
	47417	1	Handle Assembly (For 61871 & 61872)
12	**58048**	1	Carry Handle (For 4016, 61822, 61869, P157, P157-BRICK-EPR, P159, & P159-GRC)
13	**211470**	1	Piston Clip
14	**58031**	1	Pump Body Cap
15	***15092**	1	Rod Wiper
	†19321	1	Rod Wiper
	•250841	1	Rod Wiper
16	**251336**	1	Piston Ass'y (Nitrile) } For P157
	251514	1	Piston Ass'y (Viton) } For P157
	251515	1	Piston Ass'y (EPR) } For P159
	251377	1	Piston Ass'y (Nitrile) } For P159
	251516	1	Piston Ass'y (Viton) } For P159
	251517	1	Piston Ass'y (EPR) } For P159
17	***†•213987**	1	O-ring Backup Washer
18	***10271**	2	O-ring (11/16 x 1/2 x 3/32, -112; For 4016, 61821, 61822, 61869, JT05845, 61823-GRC, P159, & P159-GRC)
	***10271**	1	O-ring (11/16 x 1/2 x 3/32; For 61871, 61872, P157, & P157-LUAM)
	†11445	2	O-ring (11/16 x 1/2 x 3/32; For 4016, 61821, 61822, 61869, JT05845, 61823-GRC, P159, & P159-GRC)
	†11445	1	O-ring (11/16 x 1/2 x 3/32; For 61871, 61872, P157, & P157-LUAM)
	•19406	2	O-ring (11/16 x 1/2 x 3/32; For 4016, 61821, 61822, 61869, JT05845, 61823-GRC, P159, & P159-GRC)
	•19406	1	O-ring (11/16 x 1/2 x 3/32; For 61871, 61872, P157, & P157-LUAM)

Item No.	Part No.	No. Req'd	Description
19	**61804**	1	Pump Body
20	***214693**	1	O-ring (3-7/8 x 3-5/8 x 1/8)
	†19048	1	O-ring (3-7/8 x 3-5/8 x 1/8)
	•214072	1	O-ring (3-7/8 x 3-5/8 x 1/8)
21	**10427**	1	Plug (1/8 NPTF)
22	***215075**	1	Filter Plug
23	**21278**	1	High Pressure Relief Valve (Set at 10,100/10,700 PSI; See note below)
24	**308477**	1	Trade Name Decal (For 4016)
	308478	1	Trade Name Decal (For P157)
	308468	1	Trade Name Decal (For P159)
	201826	1	Trade Name Decal (For JT05845)
	16277	1	Trade Name Decal (For 61823-GRC & P159-GRC)
25	**211547**	1	Tie Rod
26	**58041**	1	Reservoir Assembly (For 4016, 61822, 61869, P157, P159, P157-BRICK-EPR, & P159-GRC)
	53095	1	Cap and Reservoir Assembly (For 61821, 61823-GRC, 61871, 61872, & JT05845)
	53322	1	Cap and Reservoir Assembly (For P157-LUAM)
27	**52711**	1	Reservoir Cap (Torque to 80/100 in. lbs.)
28	**10204**	1	Hex Nut (3/8-16 UNC; Torque to 150/170 in. lbs.)
29	***212739**	1	Fill Cap Gasket
	†250731	1	Fill Cap Gasket
	•250732	1	Fill Cap Gasket
30	**211769**	1	Handle Grip
	206731	1	Handle Grip (For 61871 & 61872)
31	**308486**	1	Adapter } For models 61871, 61872, P157, P157-LUAM, & P157-BRICK-EPR
32	***†19137**	1	O-ring Backup Washer (2" x 1-13/16 x 3/64) } For models 61871, 61872, P157, P157-LUAM, & P157-BRICK-EPR
33	***10913**	1	O-ring (2" x 1-13/16 x 3/32) } For models 61871, 61872, P157, P157-LUAM, & P157-BRICK-EPR
	†19015	1	O-ring
	•14287	1	O-ring

PARTS INCLUDED BUT NOT SHOWN

Part No.	No. Req'd	Description
10029	4	Cap Screw (5/16-18 UNC x 3/4 Lg.; For 61871 & 61872)
10474	1	Fitting (For 61871)
36890	1	Hose Assembly (For 61871)
†205724	1	Decal (Viton seals)
•250328	1	Decal (EPR seals)

Note: Standard relief valves are set at 10,100/10,700 PSI. Relief valves pre-set at special settings are available. Refer to your pump model number or contact Power Team Technical Services.

Part numbers marked with an asterisk (*) are contained in Standard Repair Kit No. 300487.
Part numbers marked with a dagger (†) are contained in Viton Seal Kit No. 300509.
Part numbers marked with a bullet (•) are contained in EPR Seal Kit No. 300501.

SECTION VIEWS

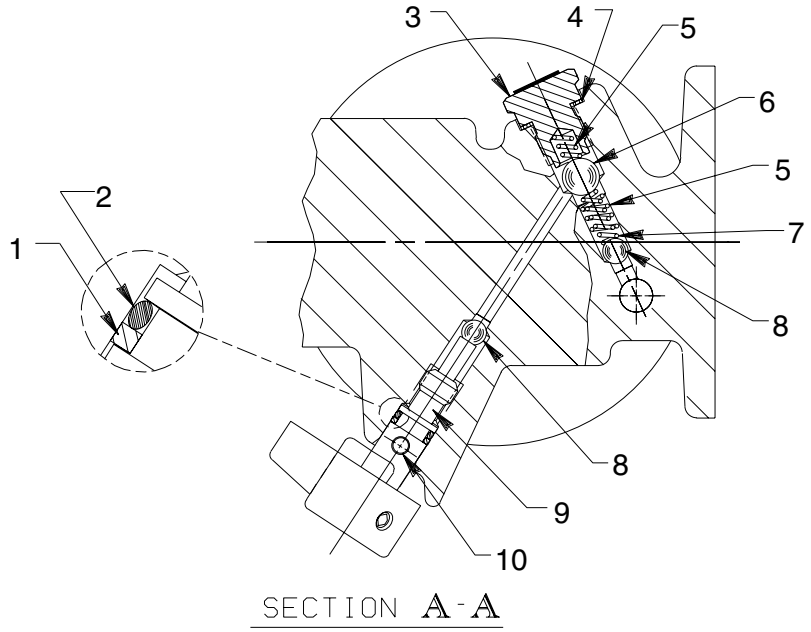

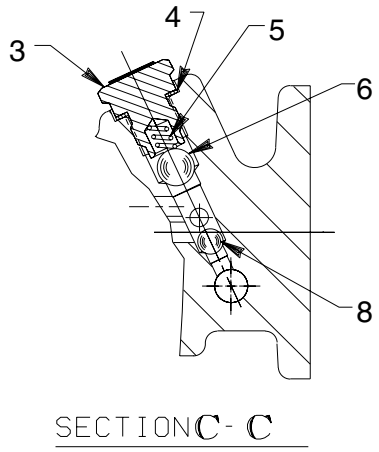

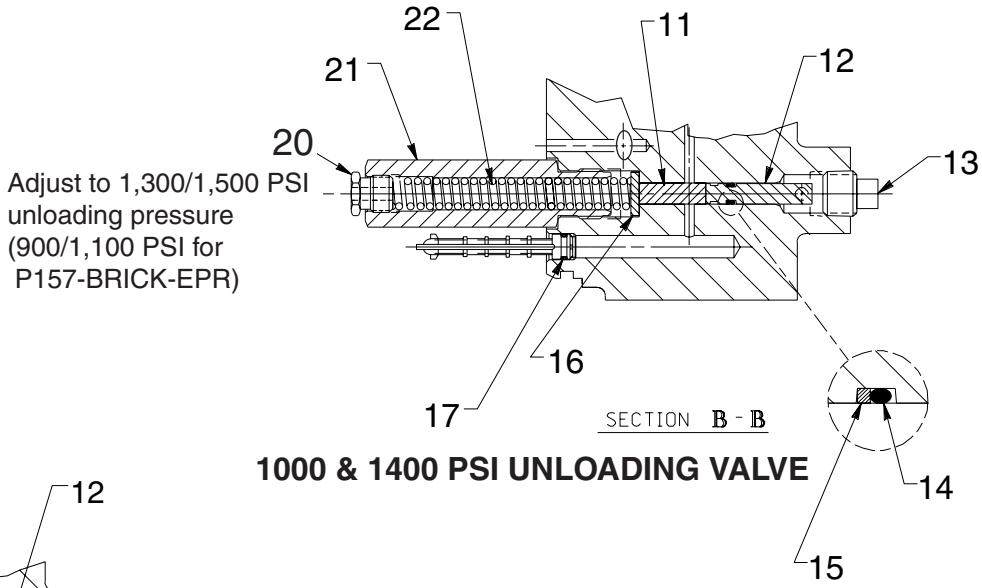

1000 & 1400 PSI UNLOADING VALVE

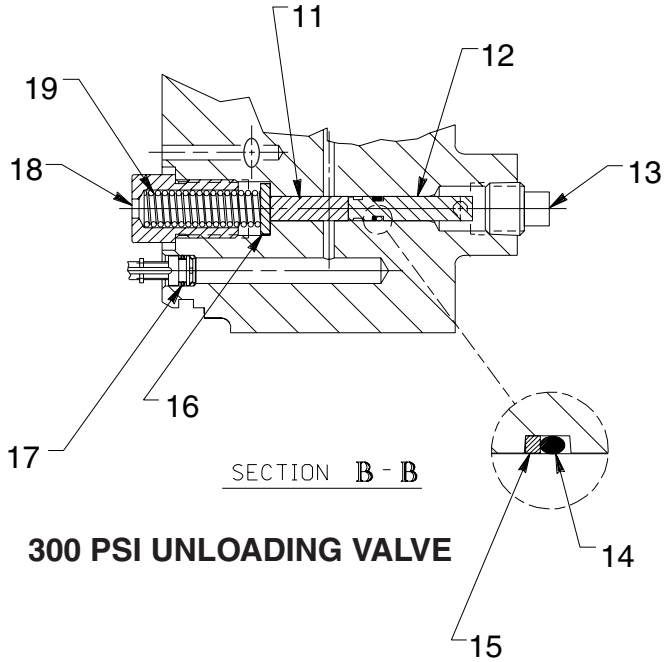

300 PSI UNLOADING VALVE

Sheet No.	**2 of 2**
Rev. 3	**Date: 27 Mar. 1998**

Item No.	Part No.	No. Req'd	Description
1	*†•15085	1	O-ring Backup Washer (7/16 x 5/16 x 3/64)
2	*10267	1	O-ring (7/16 x 5/16 x 1/16)
	†18974	1	O-ring
	•13472	1	O-ring
3	305975	2	Valve Screw (Torque to 350/370 in. lbs.)
4	*14874	2	Copper Washer (.700 x 1/2 x 1/32 thk.)
5	*10444	3	Compression Spring (3/16 I.D. x 13/32 Lg.)
6	*10378	2	Steel Ball (3/8 dia.)
7	*211797	1	Compression Spring (5/32 O.D. x 5/8 Lg.)
8	*10375	3	Steel Ball (1/4 dia.)
9	350185	1	Release Valve Screw
10	15528	1	Nylon Ball (Note: Push in nylon ball until it bottoms out in hole. Permissible to flatten ball during installation.)
11	14588	1	Dowel Pin
12	214691	1	Unloading Valve Piston
13	11127	1	Plug (3/8 NPTF)
	11127	2	Plug (3/8 NPTF; For P157-LUAM)
14	*10265	1	O-ring (5/16 x 3/16 x 3/64)
	†11437	1	O-ring
	•17714	1	O-ring
15	*†•15174	1	O-ring Backup Washer (5/16 x 3/16 x 3/64)
16	214692	1	Unloading Valve Washer
17	*12557	1	O-ring (11/32 x 7/32 x 1/16)
	†18973	1	O-ring
	•215375	1	O-ring
18	308430	1	Spring Retainer (For 4016, 61821, 61822, 61823-GRC, JT05845, P159, & P159-GRC)
19	214694	1	Compression Spring (For 4016, 61821, 61822, 61872, JT05845, P159, & P159-GRC)
20	305912	1	Valve Adjusting Screw (For 61871, 61872, P157, P157-LUAM & P157-BRICK-EPR)
21	308488	1	Spring Retainer
22	214808	1	Compression Spring (15/32 O.D. x 4-7/16 Lg.; For 61871, 61872, P157, P157-LUAM & P157-BRICK-EPR)

Part numbers marked with an asterisk (*) are contained in Standard Repair Kit No. 300487.
Part numbers marked with a dagger (†) are contained in Viton Seal Kit No. 300509.
Part numbers marked with a bullet (•) are contained in EPR Seal Kit No. 300501.

Note: Shaded areas reflect last revision(s) made to this form.

Refer to any operating instructions included with this product for detailed information about operation, testing, disassembly, reassembly, and preventive maintenance.

Items found in this parts list have been carefully tested and selected. **Therefore: Use only genuine replacement parts!**

Additional questions can be directed to our Technical Services Department.